POWER SUPPLY PROJECT REPORT

DR. ABDALLA MOHAMED
ENG. Ahmed Abdelaal

APRIL 1, 2025

HELWAN NATIONAL UNIVERSITY
ROBOTICS AND MECHATRONICS
STUDENTS NAMES:

1. MOHAMED MAGDY AHMED SALEH
2. OMAR MOHAMED ABDELSALAM
3. MOHAMED YASSER HOSNY
4. JOHN BOTROS MAHROUS
5. AMR SHERIF MAHER
6. MARK EMAD SAAD

INDEX :

1.INRODUCTION……PAGE (2)
2.IMPORTANCE ……PAGE (3)
3.COMPONENTS ……...PAGE (4)
4.USES ……PAGE (5-11)
5.CIRCUIT CONNECTIONS ...PAGE (12-16)
6.OBSTRUCTIONS ……PAGE (17-18)
7.REFFRENCES …….PAGE (19)

• INTRODUCTION:

➢ Power supply systems are fundamental to modern electrical and electronic applications, ensuring stable and reliable energy distribution for various devices and machinery. This report focuses on the design, application , and analysis of a power supply project, specifically a 220V AC to 24V DC conversion system, which is widely used in industrial control systems, automation, lighting, and security applications.

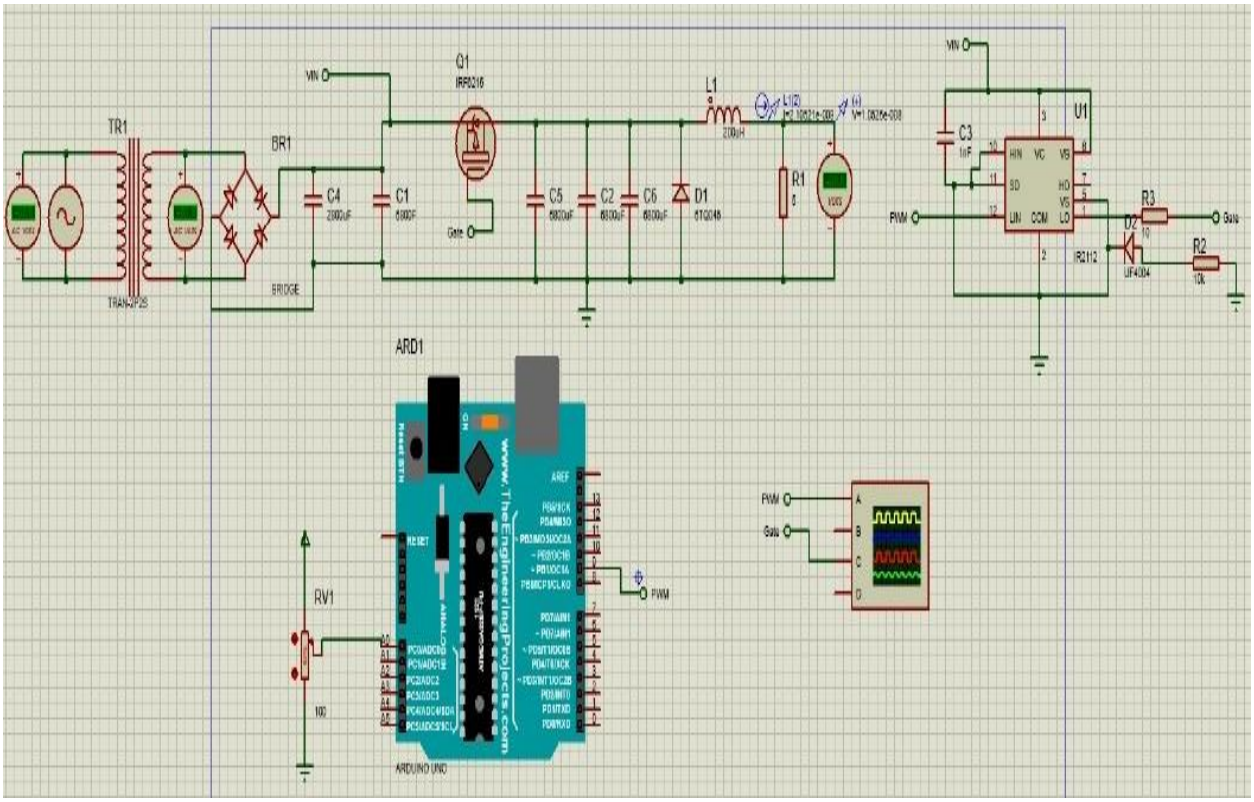

- **<u>IMPORTANCE:</u>**

➢ **Industrial Automation:**

1. Industrial automation systems, including PLCs, sensors, actuators, and communication networks, rely on a stable and consistent power source to function correctly.
2. A reliable power supply ensures continuous operation, preventing unexpected shutdowns and maintaining smooth production flow.

➢ **Protecting Sensitive Equipment:**

1. Automation equipment often contains sensitive electronic components that are vulnerable to electrical disturbances.
2. Built-in protection features like over-voltage, over-current, short-circuit, and thermal protection safeguard the automation equipment from electrical faults.

- **<u>COMPONENTS:</u>**

1) Transformer (220V-24V)
2) Bridge (1N4007)
3) Capacitor (2800µF , 6800µF , 1nF)
4) Mosfet Transistor (IRF9530N)
5) Diode (UF4007 , IN5822)
6) Gate Driver (IR2112)
7) Potentiometer (1000 Ω)
8) Resistance (5 Ω , 10 Ω , 10K Ω)
9) Inductor (100µH)
10) Arduino Uno (ATmega328P)

- **<u>USES:</u>**

➢ **Transformer**: incredibly versatile devices with a wide range of applications across various fields.

  ✓ Stepping down voltage**:** At substations and near consumers, step-down transformers reduce the high transmission voltages to lower, safer levels suitable for distribution to homes, businesses, and industries.

➢ **Bridge:** is a common general-purpose rectifier diode, and when four of them are configured as a bridge rectifier, they serve a crucial function in electronics: converting alternating current (AC) into direct current (DC).

  ✓ AC to DC Power Conversion
  ✓ Full-Wave Rectification
  ✓ Industrial Power Supplies
  ✓ Battery Charging Circuits
  ✓ Adapters and Chargers

- **Capacitor:** fundamental passive electronic components that store electrical energy in an electric field. Their ability to store and release energy, block DC while allowing AC to pass, and filter signals makes them indispensable in a vast array of applications across various fields.
    - ✓Power Supply Smoothing
    - ✓Signal Filtering
    - ✓Power Buffering
    - ✓Pulsed Power Applications
    - ✓High-Voltage Applications

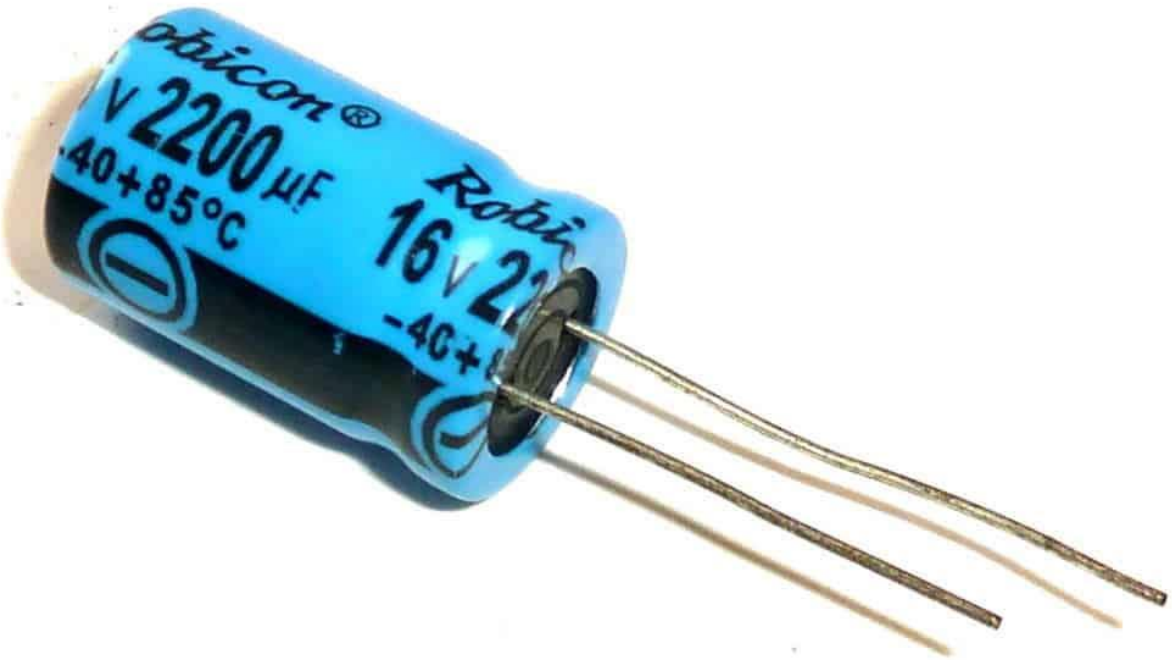

- **Mosfet Transistor:** voltage-controlled semiconductor device used for switching and amplifying electronic signals.

It consists of three terminals:

- **Gate (G):** Controls current flow
- **Drain (D):** Current exit point
- **Source (S):** Current entry point
  - ✓PWM Controllers
  - ✓DC-DC Converters

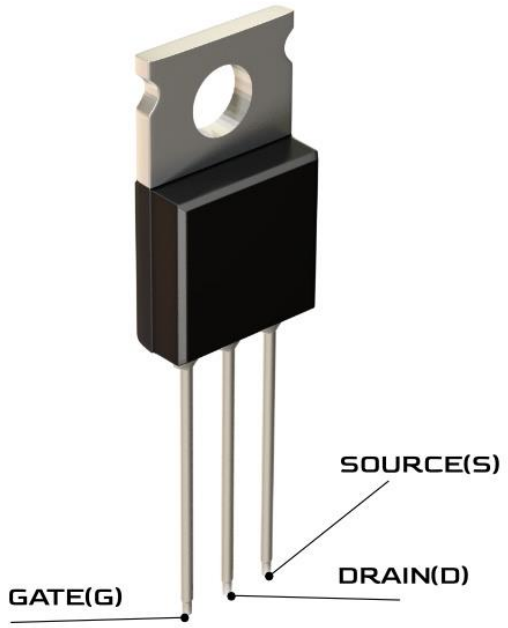

MOSFET

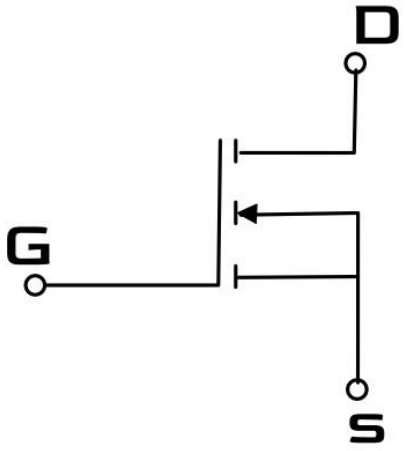

SYMBOL OF MOSFET

- **Diode:** a two-terminal semiconductor device that allows current to flow in only one direction (forward bias) while blocking it in the opposite direction (reverse bias). It is made from P-type and N-type semiconductor materials joined together to form a PN junction.
  - Unidirectional Current Flow
  - Reverse Blocking
  - Breakdown Voltage
    - ✓Rectifiers
    - ✓Voltage Regulator
    - ✓Overvoltage Protection
    - ✓Logic Gates

- **Gate Driver:** an electronic circuit that provides the necessary voltage and current to control the gate of a power transistor (such as MOSFETs or IGBTs). It acts as an interface between a low-power control signal (from a microcontroller or PWM controller) and the high-power switching device.
  - Amplification
  - Isolation
  - Fast Switching
  - Protection
    - ✓Motor Control
    - ✓Power Supplies
    - ✓Inverters

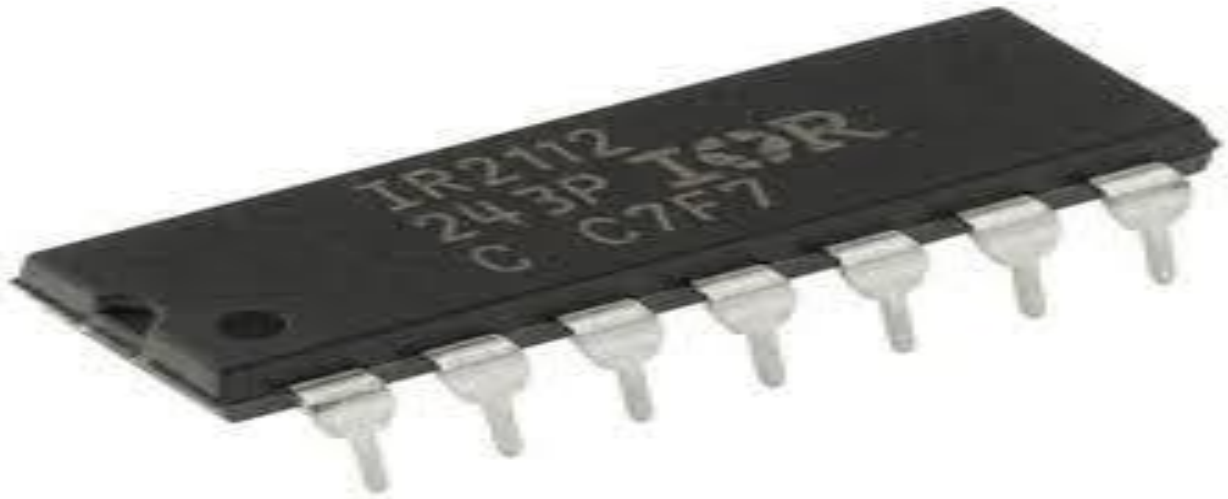

- **Potentiometer:** a three-terminal variable resistor that allows manual adjustment of resistance.
  - Two fixed terminals
  - One movable terminal
    - ✓ Volume controls
    - ✓ industrial equipment
    - ✓ Circuit calibration

- **Resistance:** is the opposition to electric current flow in a material, measured in ohms (Ω). It converts electrical energy into heat (Joule heating).
    - ✓ Current Limiting
    - ✓ Voltage Division

- **Inductor:** is a passive electronic component that stores energy in a magnetic field when electric current flows through it.
  - ✓Power Supplies
  - ✓Transformers
  - ✓Enegry Storage

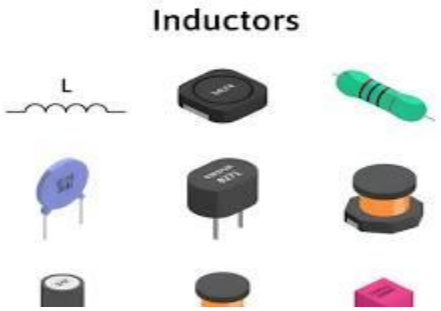

- **Arduino Uno:** is an open-source microcontroller board based on the ATmega328P chip. It is designed for easy prototyping and DIY electronics projects.
  - 14 Digital I/O Pins
  - 6 analog Input Pins
  - 16 MHz Clock Speed
  - USB Programming Interface
  - 5V Operating Voltage

  ✓Home Automation: control lights or fans / interfaces with sensors.

  ✓Robotics: drives motors for DIY robots / processes data from ultrasonic or IR sensors.

- **<u>CONNECTIONS:</u>**

➢ **AC Input (VIN):** An AC voltage source is connected to the primary winding (terminals 1 and 2) of the transformer TR1.

➢ **Transformer Secondary (TR1):** The secondary winding (terminals 3 and 4) of transformer TR1 is connected to the AC input terminals of a bridge rectifier.

➢ **Bridge Rectifier (BRIDGE):** The bridge rectifier converts the AC output of the transformer into a pulsating DC voltage.

  ✓ The positive DC output terminal (+) of the bridge rectifier is connected to the positive terminal of capacitor C4 (1000µF).

  ✓ The negative DC output terminal (-) of the bridge rectifier is connected to the ground reference of the circuit.

- **Bulk Capacitor (C4):** The capacitor C4 (2800µF) acts as a bulk capacitor to reduce the ripple in the rectified DC voltage. One terminal is connected to the positive output of the bridge rectifier, and the other terminal is connected to the ground reference.
- **High-Side MOSFET (Q1):** The positive terminal of capacitor C4 is connected to the drain terminal of the P-channel MOSFET Q1.
- **Gate Drive (Q1):** The gate terminal of MOSFET Q1 is connected to pin 9 (PWM) of the Arduino Uno (ARD1) through a current-limiting resistor R1 (100Ω).
- **Source Connection (Q1):** The source terminal of MOSFET Q1 is connected to one terminal of the inductor L1 (100µH).
- **Output Rectifier (D1):** The other terminal of the inductor L1 is connected to the cathode of the Schottky diode D1 (labeled "STPS2045"). The anode of diode D1 is connected to the ground reference.

- **Output Capacitors (C2, C5):** Two parallel output capacitors, C2 (680µF) and C5 (680µF), are connected across the output. The positive terminals of C2 and C5 are connected to the junction of the inductor L1 and the cathode of diode D1 (the positive output rail, VOUT). The negative terminals of C2 and C5 are connected to the ground reference.
- **Voltage Regulator (U1):** An adjustable voltage regulator U1 (labeled "LM317T") is used to provide a regulated DC output.
  - ✓ Pin 1 (ADJ) of U1 is connected to the wiper of a potentiometer RV1 (1kΩ). One end of RV1 is connected to the ground reference, and the other end is connected to the positive output rail (VOUT).
  - ✓ Pin 2 (VOUT) of U1 is connected to the positive output rail (VOUT), which is also connected to the positive terminals of capacitors C2 and C5.
  - ✓ Pin 3 (VIN) of U1 is connected to the positive output rail (VOUT) after the LC filter (L1, D1, C2, C5).

- **Output Capacitor (C3):** A capacitor C3 (100μF) is connected across the output of the voltage regulator U1. The positive terminal is connected to the regulated output (VOUT), and the negative terminal is connected to the ground reference.
- **Feedback Resistors (R2, R3):** Resistors R2 (1kΩ) and R3 (220Ω) form a voltage divider to provide feedback to the Arduino for voltage sensing.
  - ✓ One terminal of R2 is connected to the regulated output (VOUT).
  - ✓ The other terminal of R2 is connected to one terminal of R3 and to analog input pin A0 of the Arduino Uno (ARD1).
  - ✓ The other terminal of R3 is connected to the ground reference.

- **Arduino Uno (ARD1):** The Arduino Uno microcontroller generates a Pulse Width Modulation (PWM) signal on its digital pin 9.
  - ✓ Pin 9 (PWM): Connected to the gate of the MOSFET Q1 through the current-limiting resistor R1 (100Ω), controlling the switching of the MOSFET.
  - ✓ Pin A0 (Analog Input): Connected to the voltage divider (R2, R3) to read a voltage proportional to the regulated output voltage (VOUT).
  - ✓ GND: Connected to the ground reference of the circuit.

- **<u>Obstructions:</u>**
  - ✓ Couldn’t found a circuit on the websites to learn or know from it how to create a circuit in proteus simulator application.
  - ✓ Couldn’t know how to code the Arduino.
  - ✓ Choosing appropriate components with the required ratings, tolerances, and availability within your budget and timeframe. Lead times and obsolescence can be significant issues.
  - ✓ Designing with safety in mind, especially when dealing with mains voltages. This includes proper isolation, creepage and clearance distances, and grounding.
  - ✓ Avoiding ground loops, which can introduce noise into the circuit. A solid ground plane is often essential.
  - ✓ Mistakes during manual wiring of off-board components.

- ✓ Properly soldering different types of components (SMD, through-hole) without creating shorts, cold joints, or damaging components due to excessive heat.
- ✓ Ensuring the power supply can deliver the required current without overheating components or experiencing excessive voltage drop. This involves proper component selection (diodes, transistors, inductors, transformers) and thermal management.

- **REFFRENCES:**

  - "Switching Power Supply Design" by Abraham I. Pressman and Keith Billings.
  - (allaboutcircuits.com).
  - "Power Electronics: Converters, Applications, and Design" by Ned Mohan, Tore M. Undeland, and William P. Robbins.
  - "Power Supply Cookbook" by Marty Brown.
  - "Control Techniques in Power Electronics" by Fang Lin Luo and Hong Ye.
  - "Modern DC-DC Switchmode Power Converter Circuits" by Rudolf P. Severns and Gordon E. Bloom.